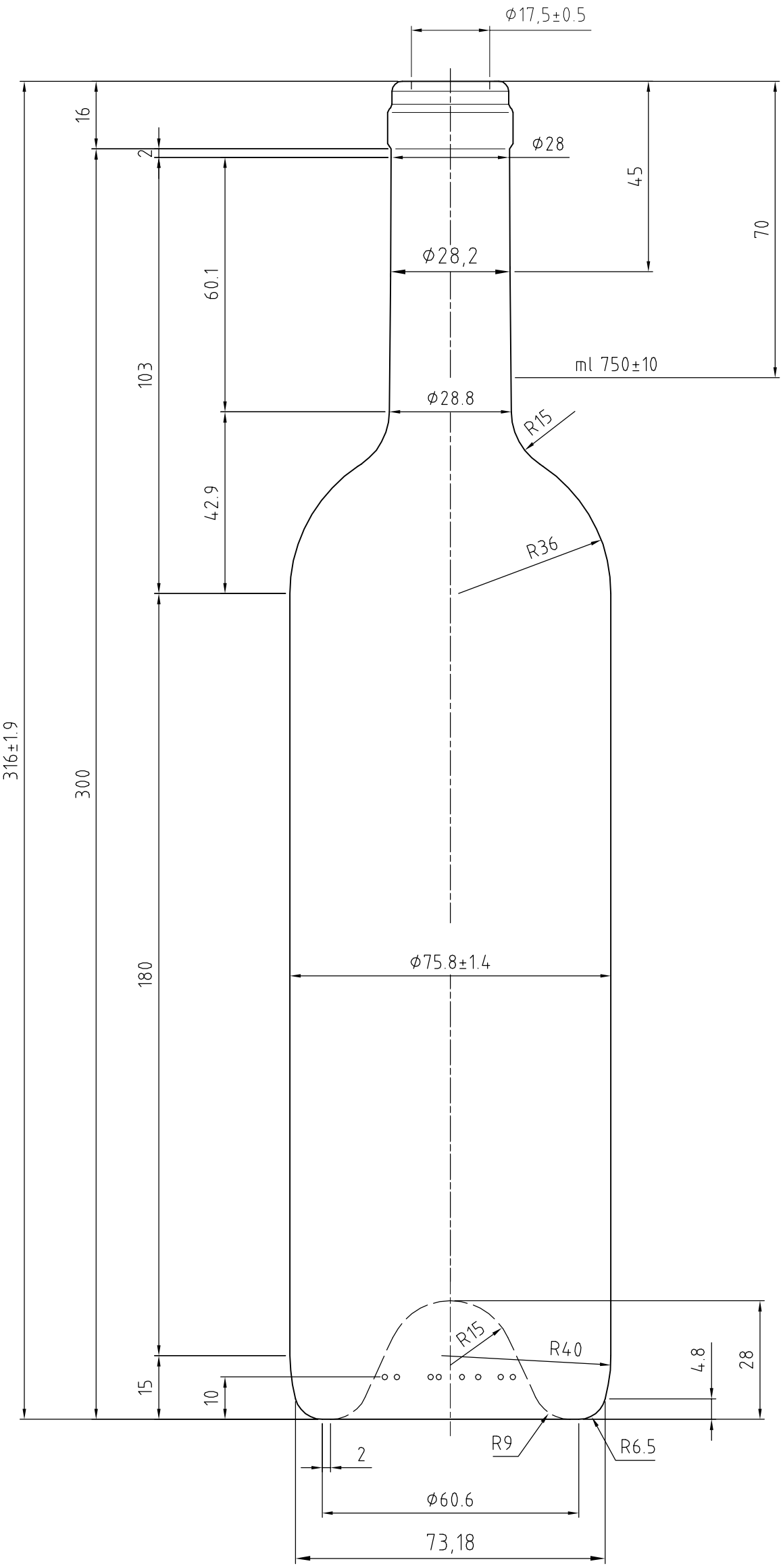

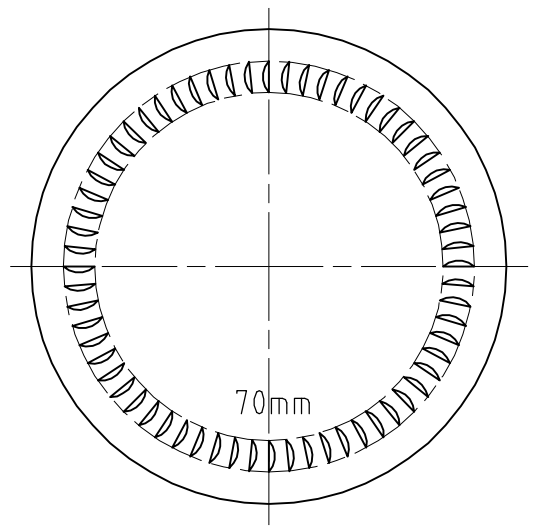

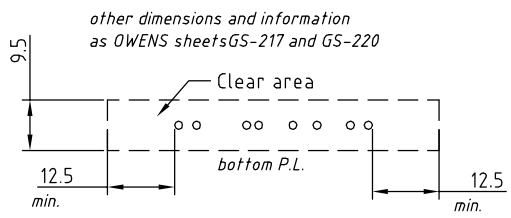

REAR VIEW

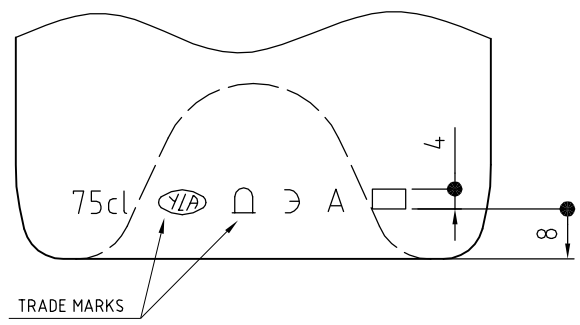

NAME	DATE	REVISIONS	MOLD NO.			A3	DRUJBA Glassworks S.A. A Member of Yioula Group	
			FINISH	FIN 000			BOTTLE	
			CAP. BRIMF.	770±10ml	MACHINE		75cl BORDOLESE EUROPEA	
			CAP. FILLPT.	750±10ml	DATE	16/12/2008		
			FILL LINE	70mm	DRAWN	Dimov	CAT.No & DWG No	
			WEIGHT	600±10gr	CHECKED	Angelov	1135000	
			COLOR		CONFIRMED		SHEET: 1/1	SCALE: 1:1